Electronics Technology Fundamentals

CHAPTER 12

CAPACITORS

12.1 Capacitors and Capacitance: An Overview – P1

Capacitance – the ability of a component to store energy in the form of an electrostatic charge

Capacitor – is a component designed to provide a specific measure of capacitance

*Two conductors separated by an insulator.

12.1 Capacitors and Capacitance: An Overview – P2

Capacitor Construction

- Plates
- Dielectric

- Unit of Measure – farad (F)

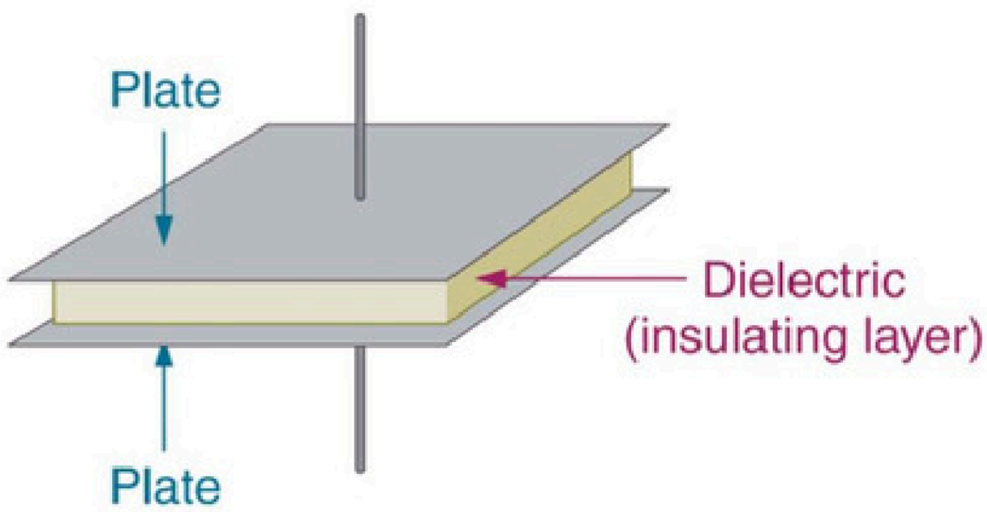

(a) Capacitor construction

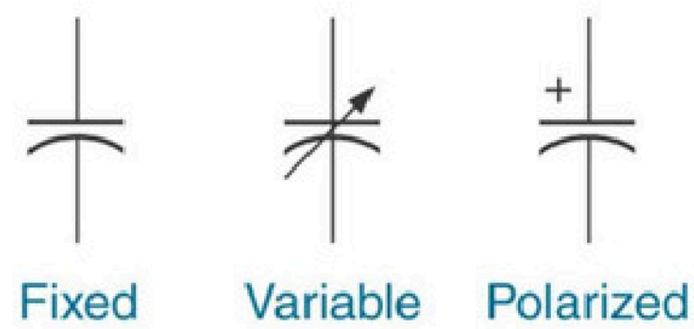

(b) Common capacitor symbols

12.1 Capacitors and Capacitance: An Overview – P9

Physical Characteristics of Capacitors

$$C = \left(8.85 \times 10^{-12}\right)\varepsilon_r \frac{A}{d}$$

where

C = the capacity of the component, in farads

$(8.85 \text{ X } 10^{-12})$ = the permittivity of a vacuum, in farads per meter (F/m)

ε_r = the relative permittivity of the dielectric

A = the area of either plate, in square meters (m^2)

d = the distance between the plates, in meters (m)

Capacitor Lab: Basics

https://phet.colorado.edu/sims/html/capacitor-lab-basics/latest/capacitor-lab-basics_en.html

12.1 Capacitors and Capacitance: An Overview – P3

Capacitor Charge

- Electrostatic Charge Develops on the Plates
- Electrostatic Field Stores energy

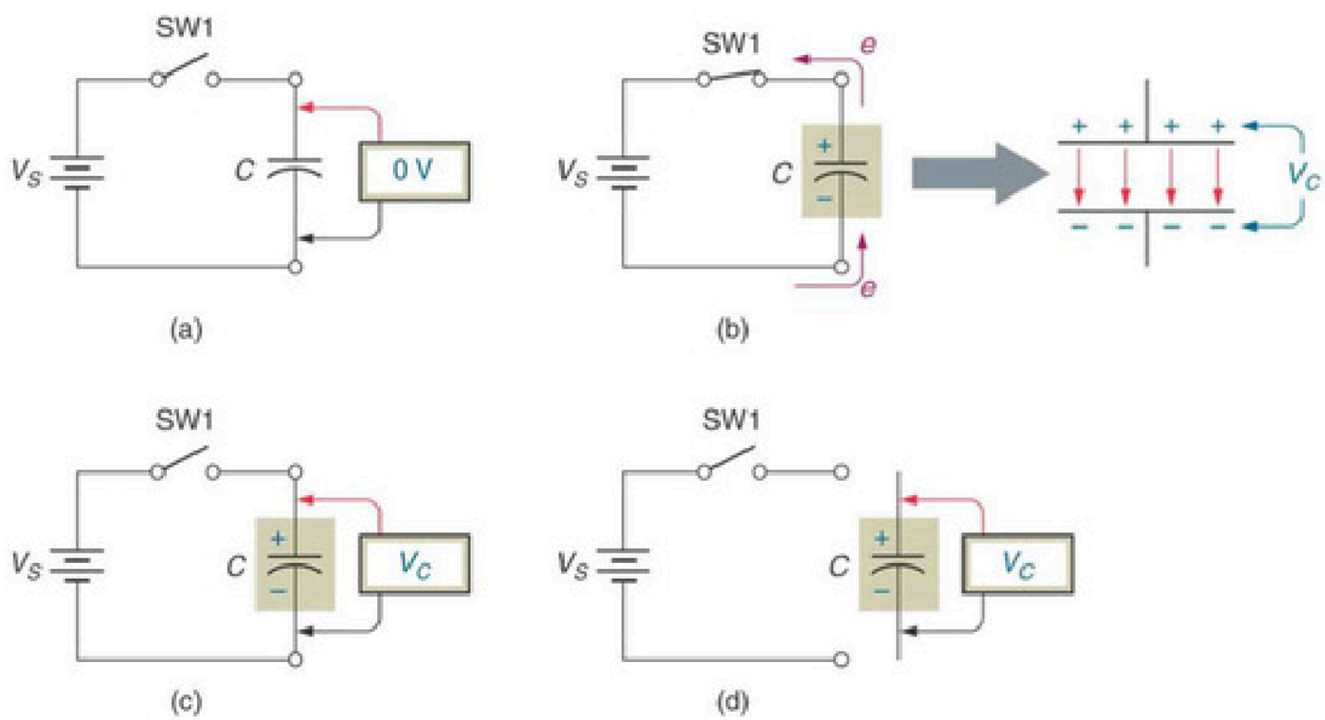

12.1 Capacitors and Capacitance: An Overview – P4

Capacitor Discharge

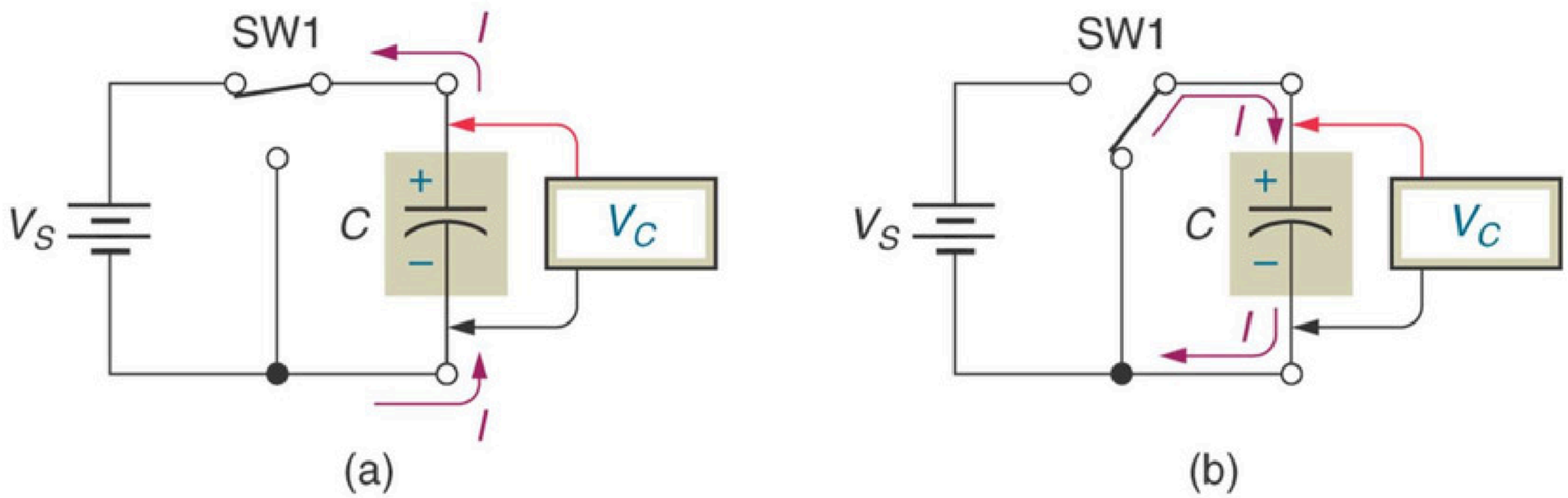

12.1 Capacitors and Capacitance: An Overview – P5

A Practical Consideration – Before handling any capacitor in a circuit, connect a shorting tool across the capacitor terminals to short out any residual charge.

12.1 Capacitors and Capacitance: An Overview – P6

Capacity – amount of charge that a capacitor can store per unit volt applied

Capacity is directly proportional to charge and inversely proportional to voltage

$$C = \frac{Q}{V} \quad \text{or} \quad Q = CV$$

where

C = the capacity (or capacitance) of the component, in coulombs per volt

Q = the total charge stored by the component

V = the voltage across the capacitor

12.1 Capacitors and Capacitance: An Overview – P7

Capacity (Continued)

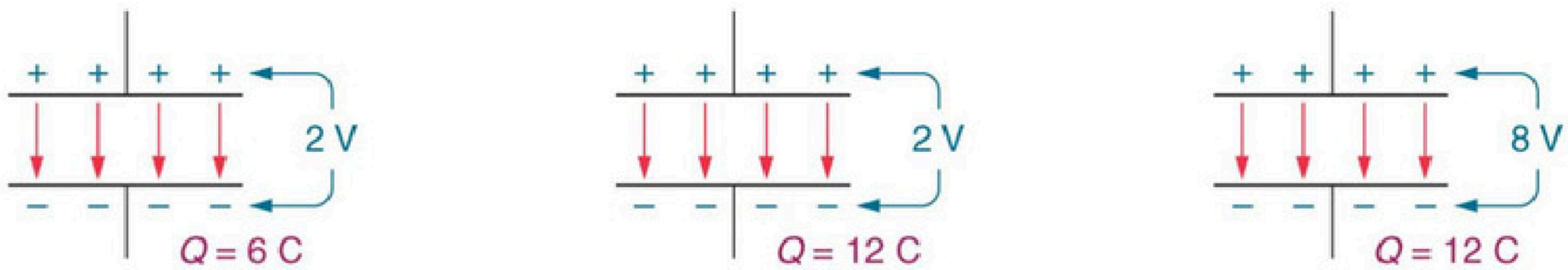

$$\text{Capacity} = \frac{Q}{V_C} = \frac{6\ \text{C}}{2\ \text{V}} = 3\ \text{C/V}$$

(a)

$$\text{Capacity} = \frac{Q}{V_C} = \frac{12\ \text{C}}{2\ \text{V}} = 6\ \text{C/V}$$

(b)

$$\text{Capacity} = \frac{Q}{V_C} = \frac{12\ \text{C}}{8\ \text{V}} = 1.5\ \text{C/V}$$

(c)

12.1 Capacitors and Capacitance: An Overview – P8

Unit of Measure – farad (F) = 1 coulomb per volt (C/V)

Capacitor Ratings

- Most capacitors rated in the picofarad (pF) to microfarad (μF) range
- Capacitors in the millifarad range are commonly rated in thousands of microfarads: 68 mF = 68,000 μF
- Capacitors in the nanofarad range are also commonly rated in microfarads: 68 nF = 0.068 μF
- Tolerance
  - Usually fairly poor
  - Variable capacitors used where exact values required

12.1 Capacitors and Capacitance: An Overview – P10

Physical Characteristics of Capacitors (Continued)

- Plate Area: capacitance is directly proportional to plate area
- Dielectric Thickness: capacitance is inversely proportional to dielectric thickness
- Dielectric Permittivity: the ease with which lines of electrical force are established in the dielectric material
- Relative Permittivity: the ratio of a material's permittivity to that of a vacuum

12.2 Series and Parallel Capacitors – P1

Series Capacitors

$$C_T = \frac{1}{\frac{1}{C_1} + \frac{1}{C_2} + \cdots + \frac{1}{C_n}}$$

Where

C_T = the total series capacitance

C_n = the highest-numbered capacitor in the circuit

12.2 Series and Parallel Capacitors – P2

Connecting Capacitors in Parallel

$$C_T = C_1 + C_2 + \cdots + C_n$$

where

C_n = the highest-numbered capacitor in the parallel circuit

12.5 Related Topics – P4

Fixed Value Capacitors (Continued)

- Polarized Electrolytic Capacitors
  - Most electrolytic capacitors are polarized
  - Care must be taken to match the polarity of the capacitor to that of any dc voltage in the circuit

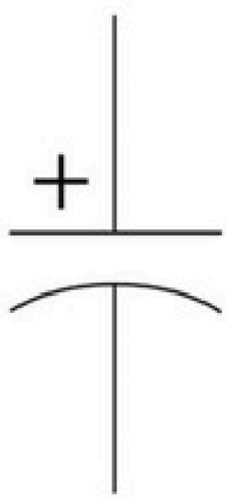

(a) Schematic symbol

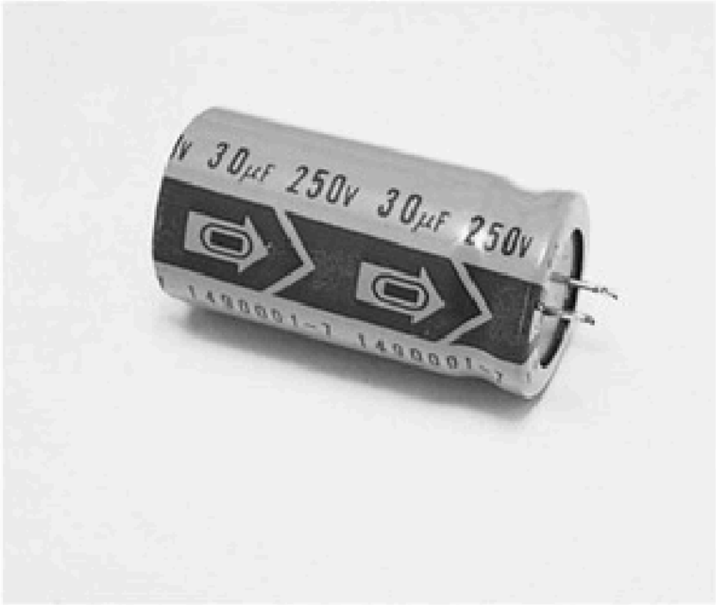

12.5 Related Topics – P5

Variable Capacitors
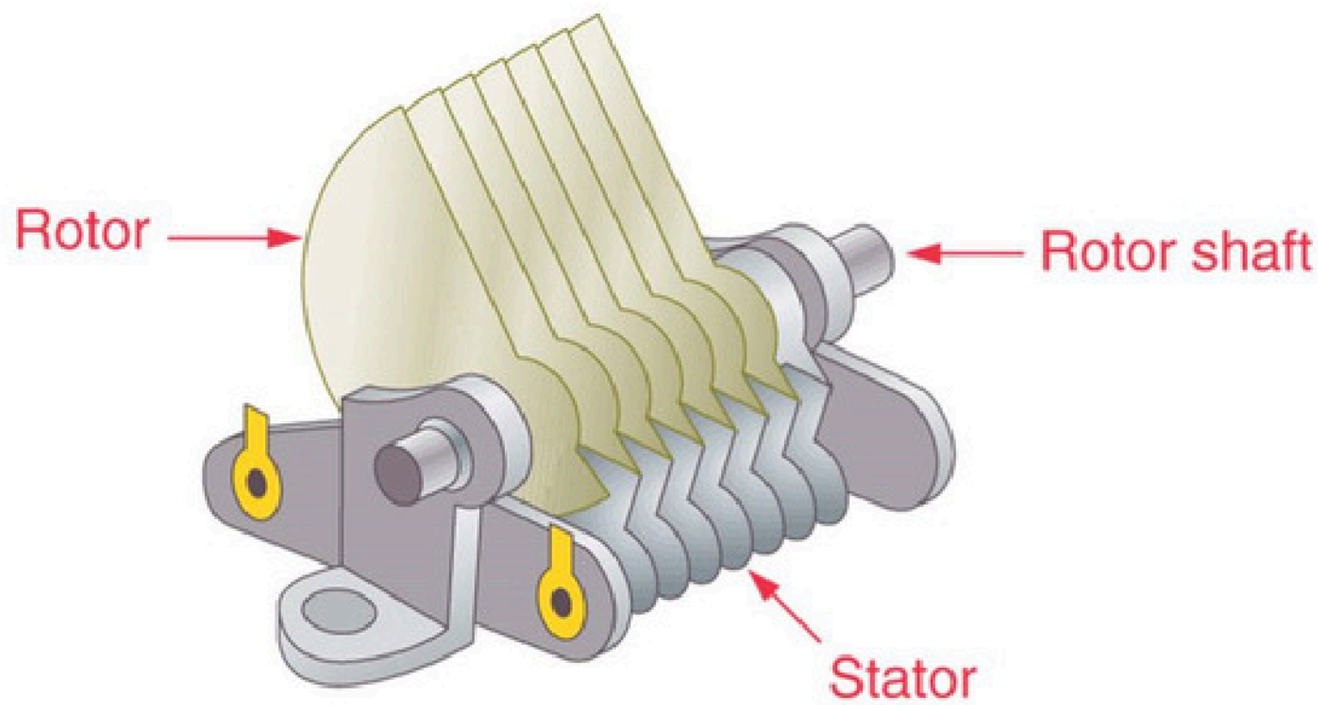
- Interleaved-Plate Capacitors